Surge Protection Barrier

M-LB-4254

- Surge protection for 2 signal lines
- Nominal voltage 48 V
- Surge protection barrier for grounded signal lines
- Max. surge current (8/20 µs) 20 kA
- Uninterruptable operation (auto reset)
- Status indication
- Modular design, pluggable
- Up to SIL 3 acc. to IEC/EN 61508

Function

The device limits induced transients of different causes, e. g. lightning or switching operations. The limitation is achieved by diverting the current to earth and limiting the signal loop voltage during the duration of the overvoltage pulse.
The device consists of base module and protection module.The protection module can be replaced without tools.
The device has a status indication at the front.
The device is mounted on a 35 mm DIN mounting rail according to EN 60715.

Connection

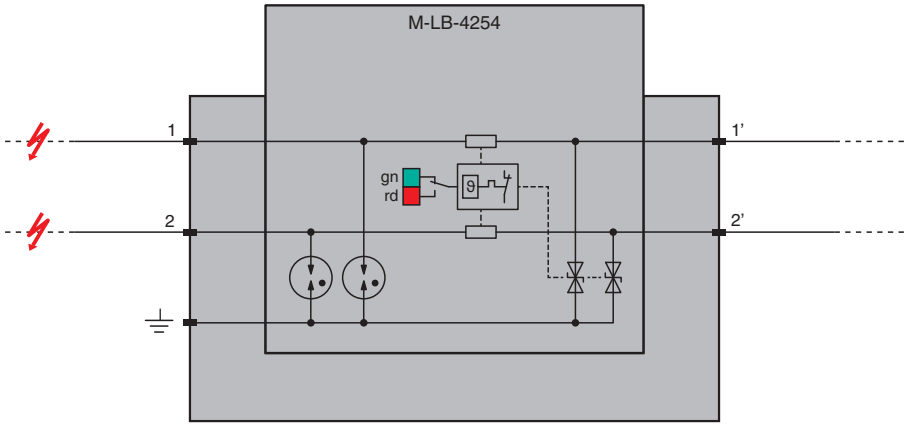

Zone 2

Technical Data

General specifications		
Number of protected signal lines		2
Topology		grounded
Functional safety related parameters		
Safety Integrity Level (SIL)		SIL 3
Electrical specifications		
Connection		protected area: terminals 1', 2' unprotected area: terminals 1, 2
Leakage current		< 20 nA bei U_c , line-line < 100 nA bei U_c , line-earth
Nominal voltage		48 V
Maximum continuous operating voltage	U_c	38.1 V AC and 54 V DC

Release date: 2023-06-20 Date of issue: 2023-06-20 Filename: 70155085_eng.pdf

Technical Data

Nominal load current	I_L	0.75 A at 70 °C (158 °F)
Series resistance		1 Ω per line
Impulse discharge current (10/350 µs)	I_{imp}	1.5 kA per line
Nominal discharge current (8/20 µs)	I_n	5 kA per line
Max. surge current (8/20 µs)	I_{max}	20 kA
Total discharge current (8/20 µs)	I_{total}	10 kA
Voltage protection level	U_p	max. 140 V line-line for nominal discharge current I_n max. 90 V line-earth for nominal discharge current I_n
Impulse reset time		< 30 ms
Cut-off frequency	f_G	5 MHz , line-line
Indicators/settings		
Display elements		status display operating state (green) fault indication (red)
Conformity		
Degree of protection		IEC 60529:2013
Functional safety		IEC/EN 61508:2010
Surge protective devices for low voltage		EN 61643-21:2001+A1:2009+A2:2013 IEC 61643-21:2001+A1:2008+A2:2012
Ambient conditions		
Ambient temperature		-40 ... 80 °C (-40 ... 176 °F)
Storage temperature		-40 ... 80 °C (-40 ... 176 °F)
Relative humidity		max. 95 % , without condensation
Corrosion resistance		acc. to ISA-S71.04, severity level G3
Mechanical specifications		
Degree of protection		IP20
Connection		spring terminals with push-in connection technology
Core cross section		0.2 ... 2.5 mm^2 one wire 0.2 ... 2.5 mm^2 fine-strand
Material		
Housing		Polyamide PA 6.6
Mass		approx. 35 g
Dimensions		6 x 90 x 69 mm (0.24 x 3.5 x 2.7 inch) (W x H x D)
Mounting		on 35 mm DIN mounting rail acc. to EN 60715:2001
Data for application in connection with hazardous areas		
Certificate		TÜV 22 ATEX 8881 X
Marking		Ⓔx II 3G Ex ec IIC T4 Gc
Temperature class		T4 for ambient temperature ≤ 80 °C
Directive conformity		
Directive 2014/34/EU		EN 60079-0:2018 , EN IEC 60079-7:2015+A1:2018
International approvals		
UL approval		E501704
IECEx approval		
IECEx certificate		IECEx TUR 22.0051X
IECEx marking		Ex ec IIC T4 Gc
General information		
Supplementary information		Observe the certificates, declarations of conformity, instruction manuals, and manuals where applicable. For information see www.pepperl-fuchs.com.

Release date: 2023-06-20 Date of issue: 2023-06-20 Filename: 70155085_eng.pdf

Assembly

Front view

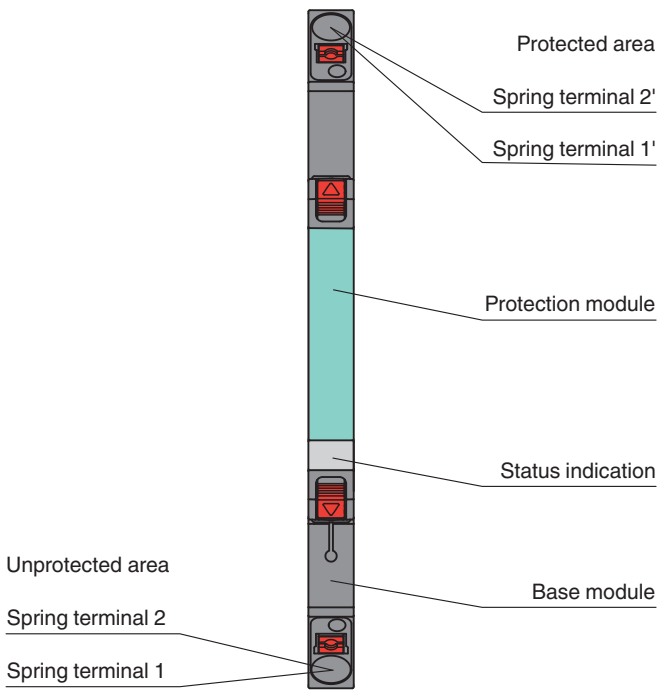

Matching System Components

	M-LB-4400	Fault Status Module

Accessories

	M-LB-4800	Separation Wall

Release date: 2023-06-20 Date of issue: 2023-06-20 Filename: 70155085_eng.pdf